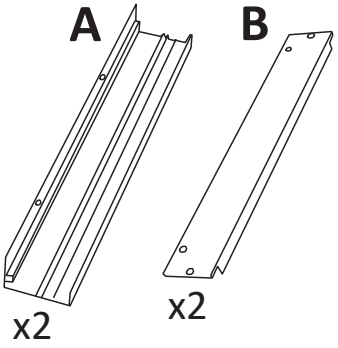

C x4

D x4

E x4

GOLD LUX

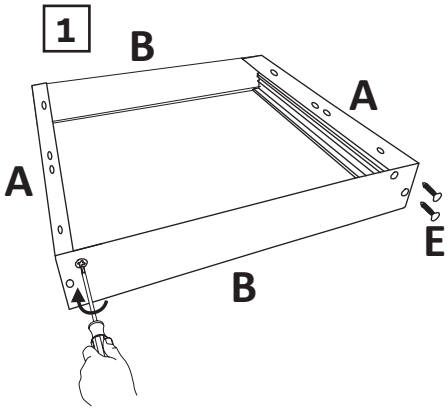

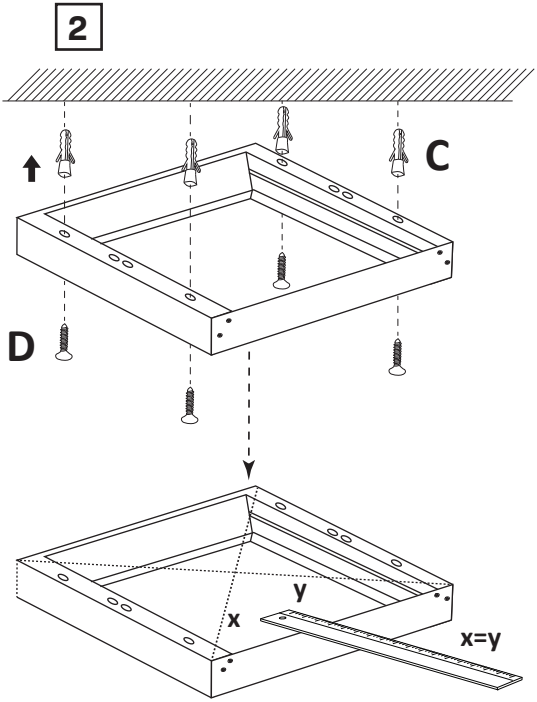

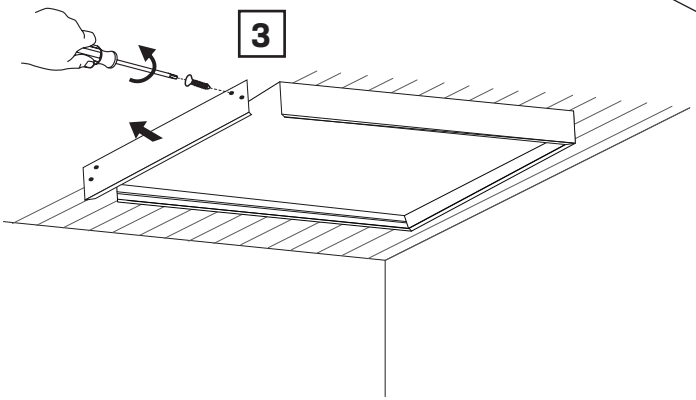

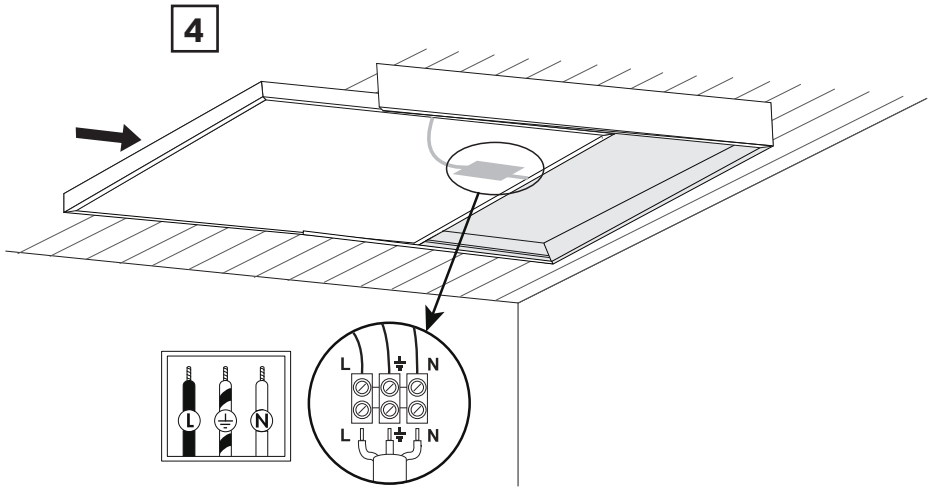

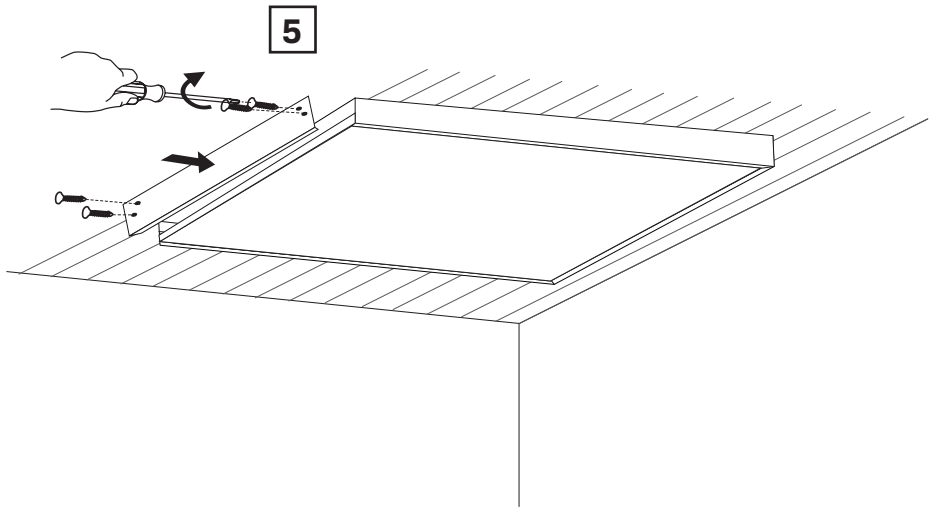

Sanico Electronics Polska Sp. z o.o.
ul. Okólna 45, 05-270 Marki
sanico@sanico.com.pl; www.sanico.com.pl